USER MANUAL

UNINTERRUPTIBLE POWER SUPPLY (UPS) SYSTEMS

SPS.ONE

salicru

General index

1. INTRODUCTION

1.1. THANK-YOU LETTER

2. SAFETY INFORMATION

2.1. USING THIS MANUAL

2.1.1. Conventions and symbols

3. QUALITY ASSURANCE AND STANDARDS

3.1. MANAGEMENT STATEMENT

3.2. STANDARDS

3.3. ENVIRONMENT

4. PRESENTATION

4.1. DIAGRAMS

4.1.1. Unit diagrams

4.1.2. Unit diagram key

4.2. CONTENTS

4.3. OPERATING PRINCIPLE

4.3.1. Features

5. INSTALLATION

5.1. STORAGE LOCATION AND CONDITIONS

5.2. CONNECTING THE UNIT TO THE MAINS FOR THE FIRST TIME OR AFTER IT HAS BEEN OUT OF USE FOR TWO MONTHS

5.3. CONNECTING THE LOADS

5.4. CONNECTING THE COMMUNICATION CABLE

5.5. DOWNLOADING AND INSTALLING THE SOFTWARE

5.6. STARTING UP/STOPPING THE UNIT

5.6.1. Starting up the SPS.ONE

5.6.2. Stopping the SPS.ONE

6. TROUBLESHOOTING GUIDE

7. GENERAL TECHNICAL SPECIFICATIONS

1. INTRODUCTION

1.1. THANK-YOU LETTER

We would like to thank you for purchasing this product. Read this instruction manual carefully in order to familiarise yourself with its contents. You will get the most out of the unit, achieve a higher the degree of satisfaction and guarantee high levels of safety the more you understand the unit.

Please do not hesitate to contact us for any further information or any questions you may have.

Yours sincerely,

SALICRU

- The unit described in this manual **can cause serious physical injury if handled incorrectly**. Therefore, the unit must only be installed, serviced and/or repaired by our staff or by **qualified personnel**.
- Although every effort has been made to guarantee that the information in this user manual is complete and accurate, we are not responsible for any errors or omissions that may be present.
  The images included in this document are for illustrative purposes only and may not accurately represent the parts of the unit shown in this manual. However, any differences will be reduced or resolved through the correct labelling on the unit.
- In line with our policy of continuous development, **we reserve the right to modify the specifications, operating principle or actions described in this document without prior notice**.
- The **reproduction, copying, transfer to third parties, modification or translation in full or in part** of this manual or document, in any form or by any means, **without prior written consent** from our company, is prohibited, with us reserving the full and exclusive right of ownership to it.

2. SAFETY INFORMATION

2.1. USING THIS MANUAL

The user manual is available for customers on our website. It can be read online or downloaded, as appropriate.

In addition to reading the manual, it is necessary to access document EK266*08, relating to the **"Safety instructions"**. Please read these instructions carefully before carrying out any action on the unit in terms of installation or start-up, change of location, configuration or handling of any type.

The purpose of the user manual is to provide information relating to safety, as well as explanations about the unit's installation and operating procedures. Read them carefully and follow the steps in the corresponding order.

⚠ **Compliance as regards the "Safety instructions" is mandatory, with the user being legally responsible** for observing and applying them.

All units are supplied with the corresponding labels to guarantee the correct identification of each part. In addition, the user can refer to the user manual at any time during installation or start-up operation, which provides clear, well-organised and easy-to-understand information.

Finally, once the unit is installed and in operation, we recommend that you keep the documentation in a safe place that is easy to access, in case of any future queries that may arise.

The following terms are used interchangeably in the document to refer to:

- **"SPS.ONE, equipment, system, unit or UPS"**.- SPS.ONE Uninterruptible Power Supply System.
  Depending on the context of the sentence, they may refer interchangeably to the UPS itself or to the UPS and the batteries.
- **"Batteries or capacitor banks"**.- A group or set of elements that stores the flow of electrons by electrochemical means.
- "**S.T.S.**".- Service and Technical Support.
- "**customer, installer, operator or user**".- They are used interchangeably and, by extension, to refer to the installer and/or the operator who will carry out the corresponding actions, whereby the responsibility for carrying out the respective actions may be held by the same person when they act on behalf or in representation of the installer or operator.

2.1.1. Conventions and symbols

Some symbols may be used and may appear on the unit, batteries and/or in the user manual.

For more information, see section 1.1.1 of document EK266*08 relating to the **"Safety Instructions"**.

3. QUALITY ASSURANCE AND STANDARDS

3.1. MANAGEMENT STATEMENT

Our aim is to satisfy our customers. Management has established a Quality and Environmental Policy for such purposes. As a result, a Quality and Environmental Management System will be implemented, which will ensure that we are compliant with the requirements of the **ISO 9001** and **ISO 14001** standards and that we meet all customer and stakeholder requirements.

The company management is also committed to the development and improvement of the Quality and Environmental Management System, through:

- Communication to the entire company of the importance of satisfaction, both in terms of the customer's requirements, as well as legal and regulatory requirements.
- Dissemination of the Quality and Environmental Policy and setting of the Quality and Environment targets.
- Management reviews.
- Provision of the necessary resources.

3.2. STANDARDS

The **SPS.ONE** product is designed, manufactured and marketed in accordance with the **EN ISO 9001** standard on Quality Assurance and is certified by SGS. The CE mark indicates conformity with the EEC Directives through application of the following standards:

- **2006/95/EC** on Low Voltage Safety.
- **2004/108/EC** on Electromagnetic Compatibility (EMC).

According to the specifications of harmonised standards. Reference standards:

- **EN-IEC 62040-1**. Uninterruptible power systems (UPS). Part 1-1: General and safety requirements for UPS used in user access areas.
- **EN-IEC 60950-1**. Information technology equipment. Safety. Part 1: General requirements.
- **EN-IEC 62040-2**. Uninterruptible power systems (UPS). Part 2: Electromagnetic compatibility (EMC) requirements.

The manufacturer shall not be held responsible for any damage caused by the user after altering or tampering with the unit in any way.

This product is suitable for use in both single-user professional and domestic applications.

The EC declaration of conformity for the product is available for the customer and can be requested from our head office.

3.3. ENVIRONMENT

This product has been designed with the protection of the environment in mind and has been manufactured in accordance with the **ISO 14001** standard.

Recycling the unit at the end of its useful life:
Our company commits to using the services of approved companies that comply with the regulations in order to process the recovered product at the end of its useful life (please contact your distributor).

Packaging:
To recycle the packaging, follow the applicable legal regulations, depending on the particular standards of the country where the unit is installed.

Batteries:
The batteries represent a serious health and environmental risk. They must be disposed of in accordance with the applicable laws.

4. PRESENTATION

4.1. DIAGRAMS

4.1.1. Unit diagrams

Figures 1 to 4 show illustrations of the units, according to the model. Nevertheless and as the product is continuously being developed, there may be slight discrepancies or inconsistencies. Therefore, in the case of any queries, the labels on the unit will always take precedence.

All of the values for the main specifications or features can be checked on the unit's name plate. Act accordingly for your installation.

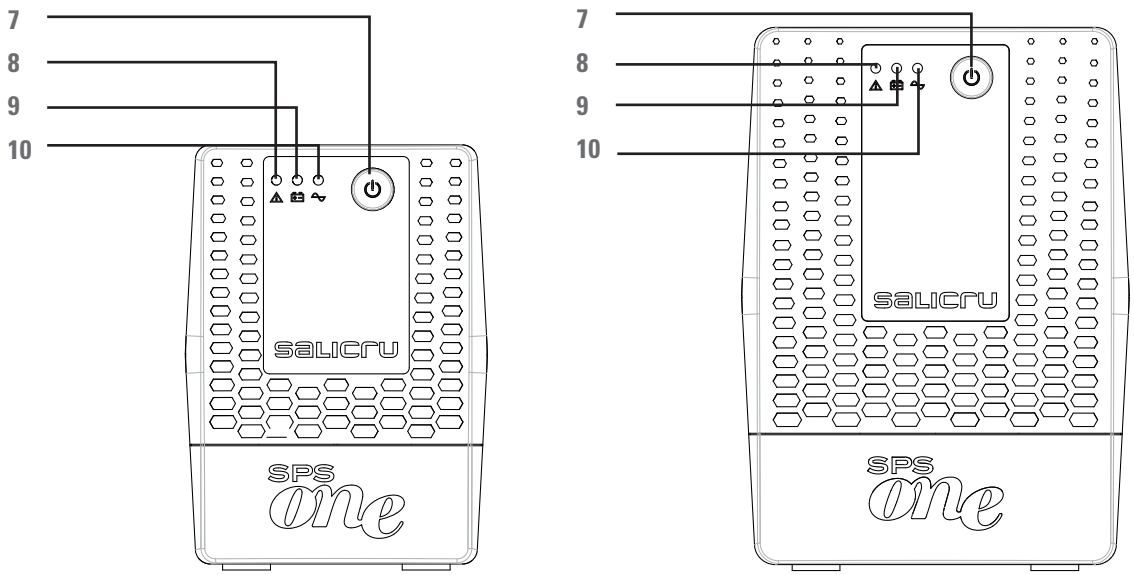

SPS.500.ONE, SPS.700.ONE and SPS.900.ONE

SPS.1100.ONE, SPS.1500.ONE and SPS.2000.ONE

Fig. 1. Front views of SPS.ONE.

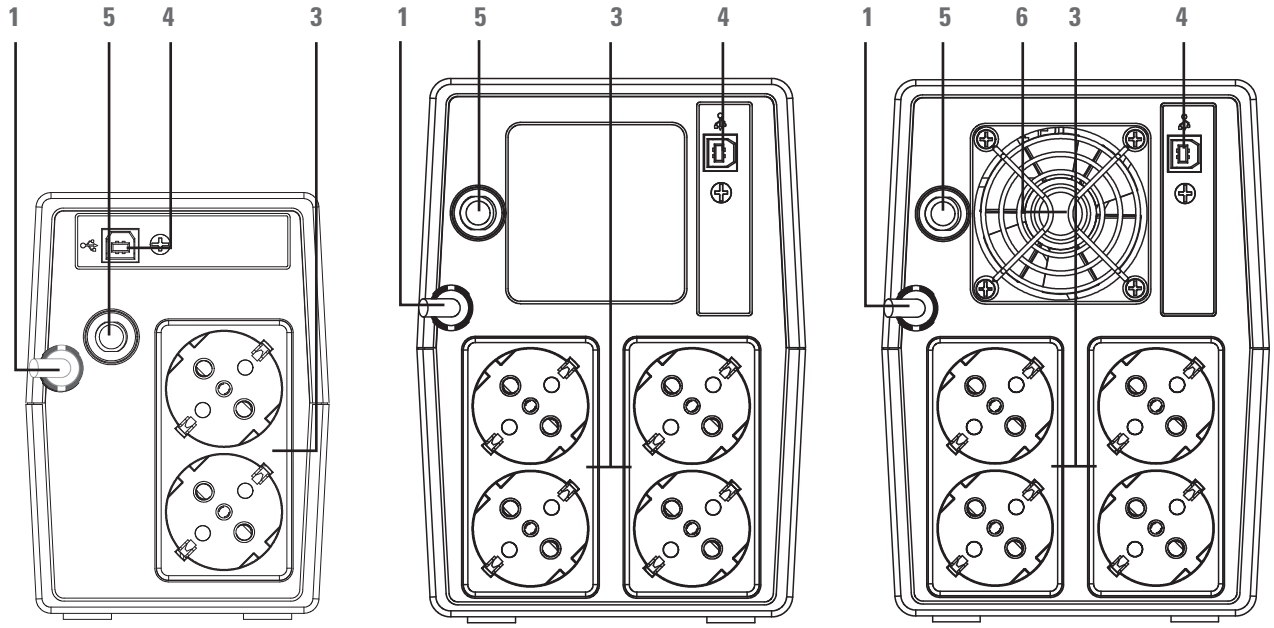

SPS.500.ONE, SPS.700.ONE and SPS.900.ONE

SPS.1100.ONE

SPS.1500.ONE and SPS.2000.ONE

Fig. 2. Rear views, with Schuko sockets.

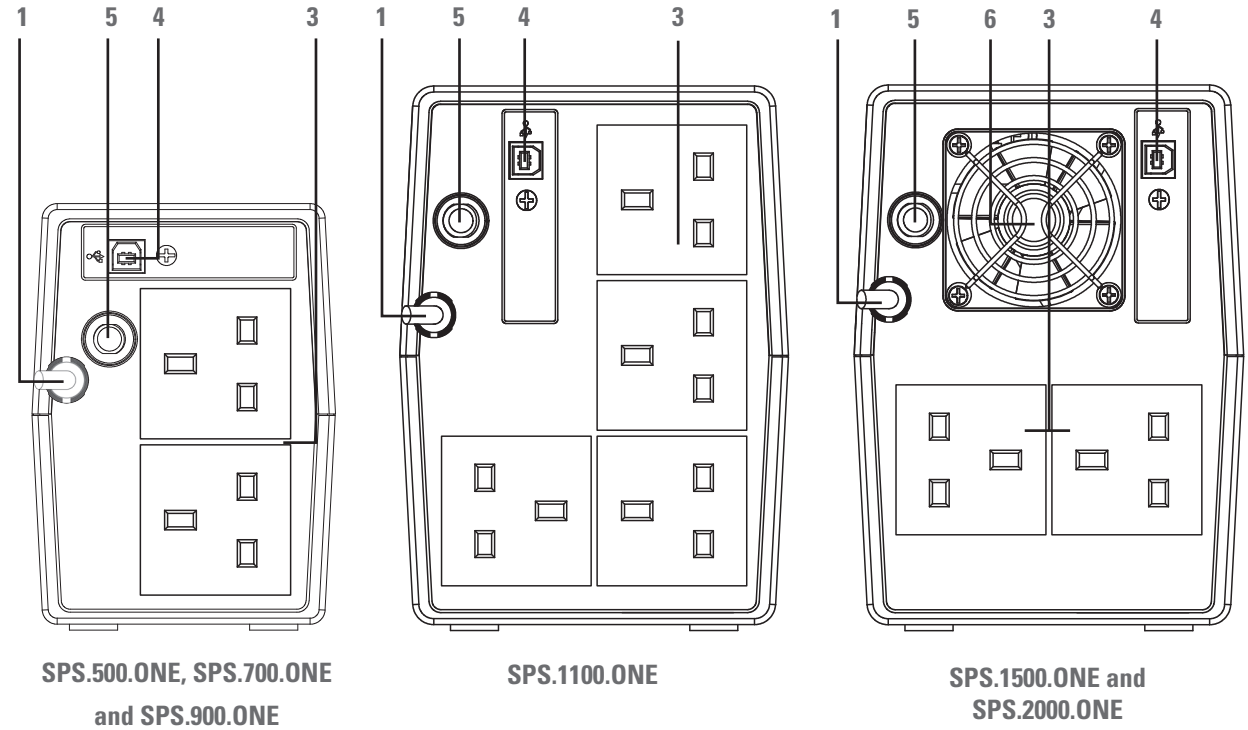

Fig. 3. Rear views, with British (UK) sockets.

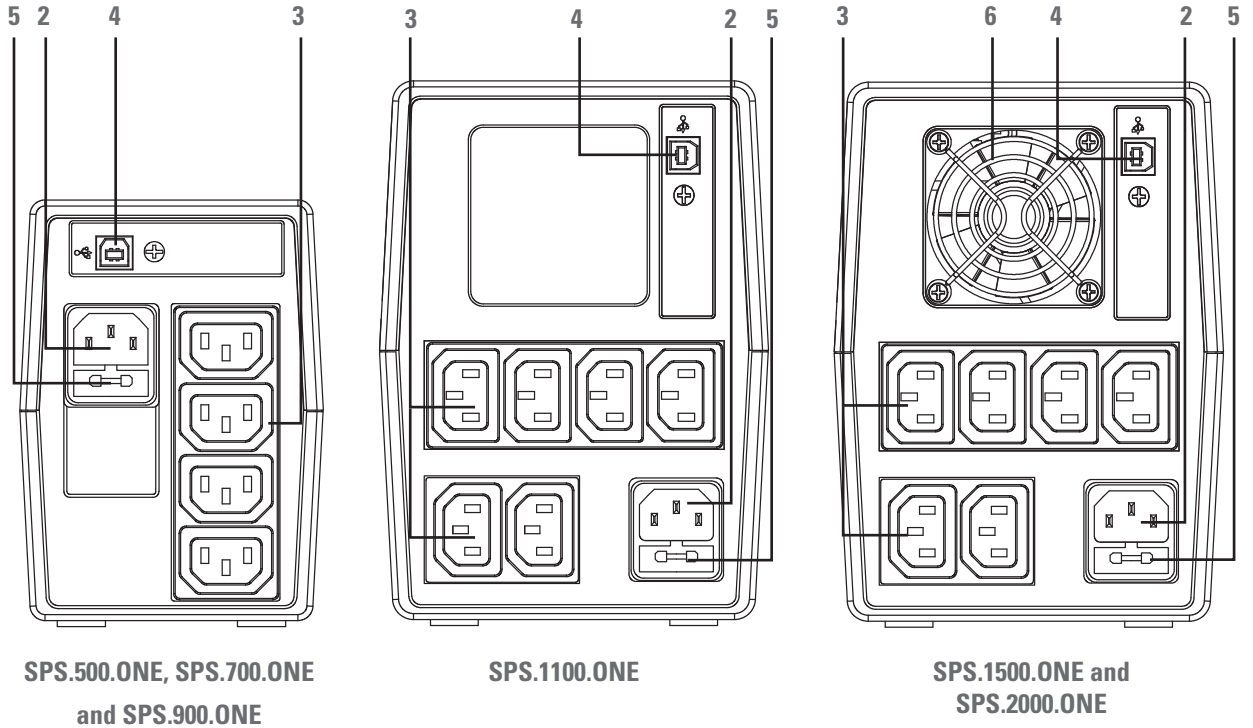

Fig. 4. Rear views, with IEC sockets.

4.1.2. Unit diagram key

1. Power cable with pin on end.

2. IEC socket used to power the unit (only in models without the power supply cable **1**).

3. Output sockets.

4. USB HID communication port.

5. Input protection via circuit breaker or fuse, depending on the model.

6. Fan of the unit (only in models SPS.1500.ONE and SPS.2000.ONE).

7. Unit start and stop button.

8. Red LED lit. Unit in the Fail-safe Mode. This LED is also used to warn the user about the fact that the unit charge level is too low, when it starts to flash, and with the same modulation as that of the acoustic alarm.

9. Flashing yellow LED. Unit in the Battery Mode - output power supply from the internal battery-.

10. Green LED on. Unit in the AC Mode - output power supply from the input voltage-.

4.2. CONTENTS

The following is supplied within the unit's packaging:

- For the models with UK and Schuko sockets:
  - SPS.ONE unit.
  - Quick guide.
  - USB HID communication cable.
- For models with IEC sockets:
  - SPS.ONE unit.
  - Quick guide.
  - USB HID communication cable.
  - 1 output cable for models 500/700/900 and 2 output cables for models 1100/1500/2000.

4.3. OPERATING PRINCIPLE

- It is an Uninterruptible Power Supply (UPS) system with line-interactive technology that offers the best protection solution for the units and the information that make up both domestic and professional IT environments (small businesses, offices, shops, etc.).
- The use of AVR Boost&Buck technology - permanent stabilisation of the supply voltage - provides a two-fold advantage: higher protection of connected loads, combined with a reduced use of UPS batteries.
- In the case of a power supply outage, it supplies electrical power from the batteries to ensure the units continue operating.
- It is also worth mentioning the built-in communication functions to communicate between the UPS and computer system through the USB HID port (communication cable supplied with the unit) and the monitoring software, compatible with Windows, Linux, Unix and Mac.

4.3.1. Features

- Line-interactive technology
- High level of reliability through control by microprocessor
- AVR Boost&Buck permanent stabilisation
- USB HID interface in all models, by default
- Monitoring software for Windows, Linux, Unix and Mac
- A single on/off button for easy and convenient use
- Protection against overloads, short-circuits and transients
- Smart battery charger that reduces the average recharging time
- Recharging the batteries with the equipment switched off
- Cold start function using the batteries (not connected to the mains)
- Automatic start-up after the input voltage is reconnected

5. INSTALLATION

- Read and follow the Safety Information set out in chapter 2 of this document. Failure to adhere to any of the indications set out in chapter 2 may cause a serious or very serious accident for those who are in direct contact with the unit or who are in the vicinity, as well as faults in the unit and/or in the loads connected to it.
- Check that the information on the name plate is the right information for the installation.
- Once you have unpacked the unit, inspect it and ensure that it is in perfect condition before proceeding. If this is not the case, please contact your distributor.
- Limitations to the connection and use of the unit according to its morphology and sector or work environment:

  ❒ For its connection.

  – In units with a power supply plug and output sockets (**with no connection terminals**).

  It can be connected by **staff with no specific technical training**; in general, by anyone who uses household appliances.

  ❒ For its use.

  – Unit **with no connection terminals**, generally designed for household environments and, to a lesser extent, for shops, industry and other sectors.

  The unit can be used by staff with no specific technical training by simply following the instructions in the user manual.
- The unit will be connected in all modes with the switches set to standby and disconnected from the mains (circuit breaker in the UPS power supply line set to «Off»), including in the control mode (interface).
- Always bear in mind that the UPS is an electrical generator, which is why the user must take the necessary precautions to prevent direct or indirect contact.

5.1. STORAGE LOCATION AND CONDITIONS

- Install the UPS in a protected area that does not have excessive humidity but has suitable ventilation.
- Place the UPS at a distance of at least 20 cm from other units to prevent interference.
- Do not operate the unit where the temperature and humidity exceed the permitted limits (see the technical specifications).

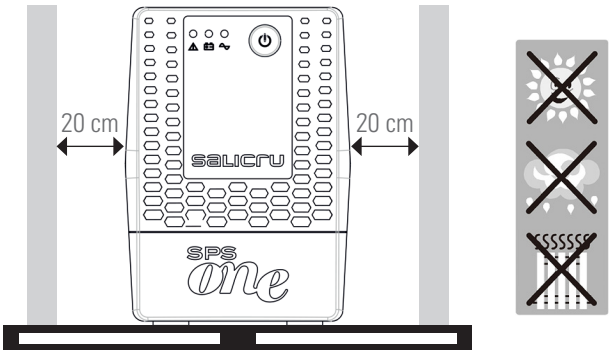

5.2. CONNECTING THE UNIT TO THE MAINS FOR THE FIRST TIME OR AFTER IT HAS BEEN OUT OF USE FOR TWO MONTHS

- Insert the mains plug 1 into an AC socket.

  In models with an IEC socket, a cable is supplied to power the unit. Insert the end of the connector into the base **2** and the plug on the other end into the AC socket.

- For the best results, charge the battery for at least 4 hours before using the unit for the first time or when it has been out of use for more than two months.

  Otherwise, the SPS.ONE may not react in a satisfactory way if there is an outage during the initial operating hours. Its response capacity during unexpected AC power supply failures is dependent on the energy accumulated in the battery.
- The battery charges by simply connecting the unit to the mains.

5.3. CONNECTING THE LOADS

- Connect the loads to the sockets **3** on the rear of the unit.
- Never connect a laser printer or scanner to the UPS. This may damage the unit and/or consume the energy stored in the batteries, which is reserved for other more sensitive and more important types of loads.

5.4. CONNECTING THE COMMUNICATION CABLE

- To enable unattended start-up/stop of the UPS and to monitor its status, connect one end of the communication cable to the connector **4** of the USB HID port of SPS.ONE and the other end to the communication port of the PC.
- With the monitoring software installed in your PC, you can programme the UPS start-up/stopping time, as well as monitor its status in real-time. Follow the steps described below before downloading and installing the monitoring software:

5.5. DOWNLOADING AND INSTALLING THE SOFTWARE

- To download the free monitoring software, register as a user and then register your unit(s) at the following site:

  support.salicru.com
- You will find a link to the "ACTIVATION GUIDE" on the registration page. Follow the steps indicated.
- Once you have registered, you can download the software for each model from the site:

  support.salicru.com/software
- Use with your installation as with any other type of software.
- When you reboot your PC, the monitoring software will appear as an orange icon on the system tray, next to the clock.

5.6. STARTING UP/STOPPING THE UNIT

5.6.1. Starting up the SPS.ONE

- With SPS.ONE stopped, press the button **7** to start the unit.
- When the unit is started, an internal test is performed and all LEDs are turned on. The process takes a few seconds, after which the UPS will supply an output voltage, either from the mains or from its batteries.

  The auto-test will be performed regardless of whether the start-up process is carried out with the unit connected to the mains or running on its batteries (no mains connection).
- Start up the loads.

5.6.2. Stopping the SPS.ONE

- Stopping the loads.
- Switch the unit off, press the button **7**.

6. TROUBLESHOOTING GUIDE

Use the following table to resolve minor issues:

Problem	Possible cause	Solutions
No LED is lit on the front panel.	Low battery.	Charge the UPS for at least 6 hours.
	Battery fault.	Replace the battery with the same model.
	The UPS is not ON.	Press the UPS start-up button again.
The alarm sounds continuously when connected to the mains.	The UPS is overloaded.	First, disconnect a few loads. Before starting it up again, check that the connected load matches the unit's power specifications.
In the case of a problem in the mains, the operating time is very short.	The UPS is overloaded.	Disconnect critical loads.
	Battery voltage is too low.	Charge the UPS for at least 6 hours.
	Defective battery. It may be due to the ambient temperature or inappropriate operation.	Replace the battery with the same model.
There are no problems in the mains but the unit is in battery mode.	The mains cable plug is not connected correctly.	Reconnect the mains cable plug correctly.

Tabla 1. Troubleshooting table.

- If you are registered on the website:

  support.salicru.com

  , you can access:

  support.salicru.com/troubleshooting

  , to consult the extended troubleshooting guide of the unit, in addition to accessing other services available for registered users.

7. GENERAL TECHNICAL SPECIFICATIONS

MODEL	500	700	900	1100	1500	2000
Power (VA)	500	700	900	1100	1500	2000
Power (W)	240	360	480	600	900	1200
Technology	Line-interactive					
INPUT						
Voltage [1]	220 / 230 / 240 VAC.					
Margins	162-290 VAC.					
Nominal frequency	50 / 60 Hz.					
Frequency auto-detect	Yes.					
Stabilisation	AVR buck/boost.					
OUTPUT						
Voltage (VAC)	220 / 230 / 240 VAC.					
Voltage accuracy [2]	± 10 %.					
Frequency [2]	50 / 60 ± 1 Hz.					
Waveform [2]	Pseudo-sine (simulated sine).					
Available socket types	Schuko (DIN), British (UK), IEC.					

MODEL	500	700	900	1100	1500	2000
Transfer time	standard 2-6 ms, maximum 10 ms.					
PROTECTION						
Input	Thermal self-resetting or fuse (according to the model).					
Complete protection	Overload, battery discharged and overcurrent in the charging device.					
BATTERY						
Type	Sealed Pb-Ca, maintenance free, useful life of 3-5 years.					
Charge time	4 -6 hours to charge 90% of its capacity.					
Battery replacement warning	Yes.					
Can be replaced by the user	Yes.					
Capacity (Ah)	4.5	7	9	7	9	
Number	1			2		
FUNCTIONS						
Cold start	Yes.					
Auto-test	At start-up.					
Automatic restart	Yes, once the operating time has ended and after reconnected to the mains.					

MODEL	500	700	900	1100	1500	2000
OPTICAL LED INDICATIONS AND ACOUSTIC ALARMS						
Normal operation, connected to the mains	Green LED On Alarm Off					
Mains error and UPS in the battery mode	Yellow LED flashing Beeping sound every 10 sec.					
Low battery	Yellow LED flashing. Red LED On Beeping sound every sec.					
UPS stopped	Green LED Off Alarm Off					
UPS fault	Red LED On Constant beeping					
COMMUNICATION						
Port	USB HID					
Software	Supports Windows, Linux, Unix and Mac operating systems.					
Download from	support.salicru.com					
GENERAL						
Maximum altitude	2400 m a.s.l.					
Relative humidity	Up to 90%, non-condensing.					
Temperature	0.. 40ºC.					
Acoustic noise at 1 m.	< 40 dBA.					
STANDARDS						
Safety	EN-IEC 62040-1, EN-IEC 60950-1.					
Electromagnetic compatibility. (EMC)	EN-IEC 62040-2.					
Quality and Environmental Management	ISO 9001 and ISO 14001.					
DIMENSIONS AND WEIGHT						
Depth (mm)	300			320		
Width (mm)	101			130		
Height (mm)	142			182		
Net weight (kg)	3.50	4.45	4.90	8.20	10.40	11.00

[1] The autonomy and power of the equipment can be affected depending on the input voltage.
[2] Battery Mode.

Tabla 2. General technical specifications.

✎ :

Avda. de la Serra 100
08460 Palautordera
BARCELONA
Tel. +34 93 848 24 00
Fax +34 93 848 22 05
services@salicru.com
SALICRU.COM

The Technical Service and Support (T.S.S.) network, Commercial network and warranty information are available in website:
www.salicru.com

Product Range
Uninterruptible Power Supplies (UPS)
Lighting Flow Dimmer-Stabilisers
DC Power Systems
Static Inverters
Photovoltaic Inverters
Voltage stabilisers

@salicru_SA

www.linkedin.com/company/salicru